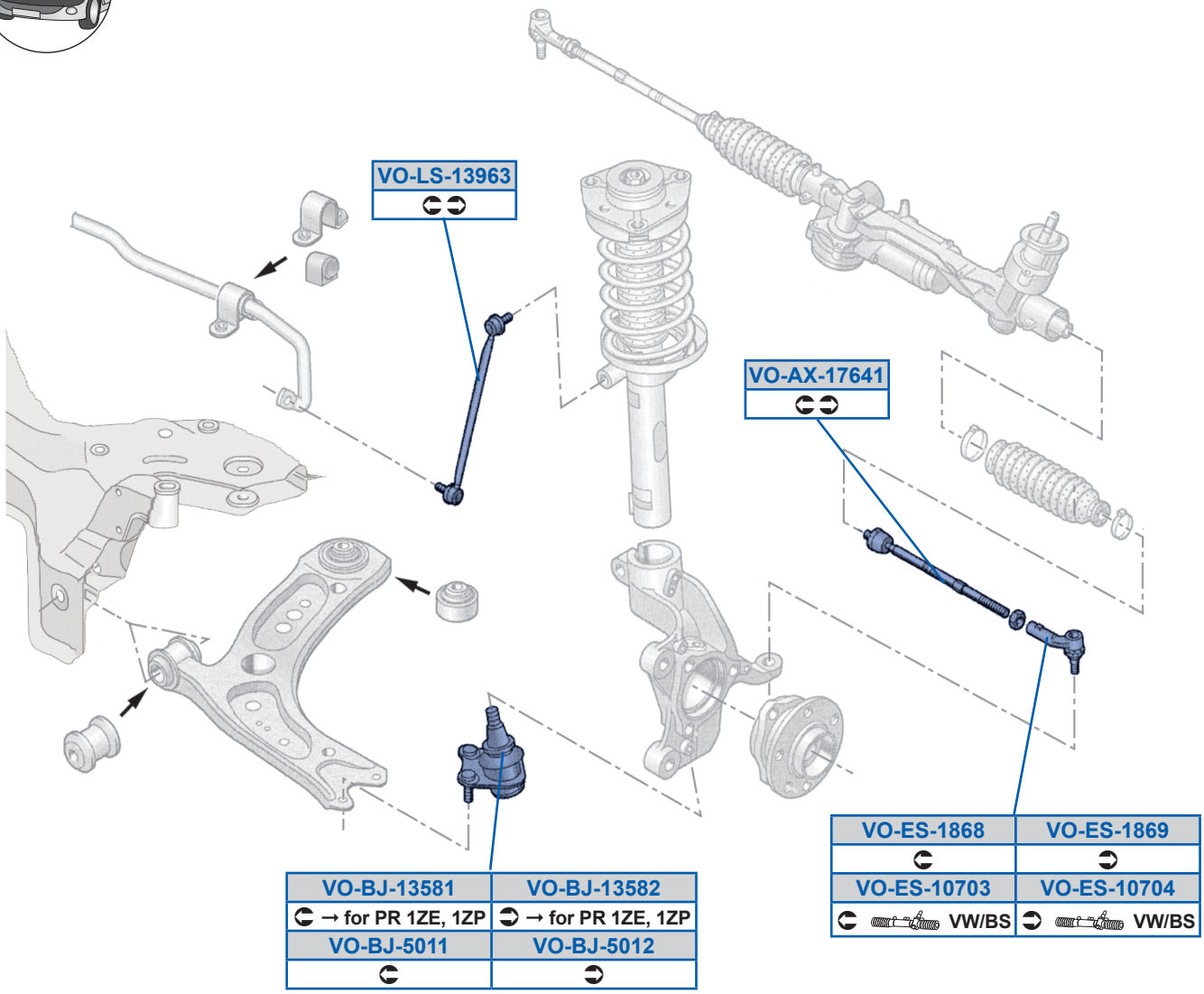
VO-LS-13963
VO-AX-17641
VO-BJ-13581
VO-BJ-13582
→ for PR 1ZE, 1ZP
→ for PR 1ZE, 1ZP
VO-BJ-5011
VO-BJ-5012
VO-ES-1868
VO-ES-1869
VO-ES-10703
VO-ES-10704
VW/BS
VW/BS



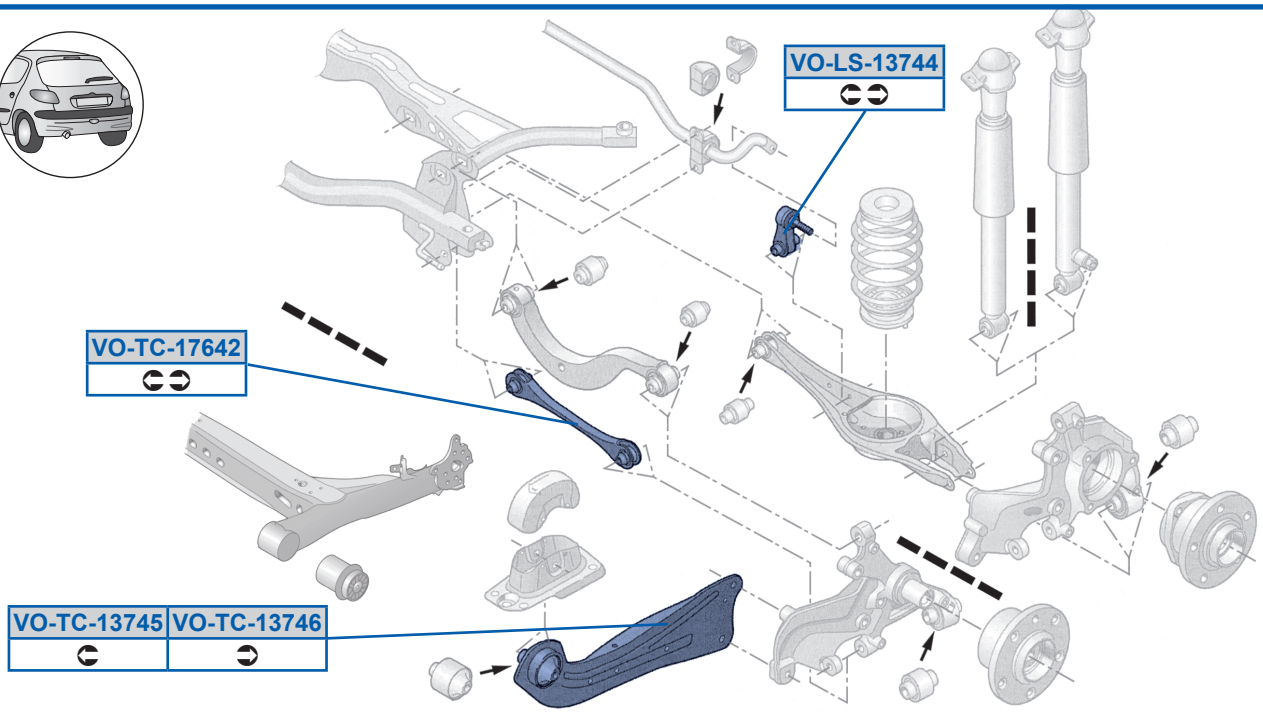
VO-LS-13744
VO-TC-17642
VO-TC-13745
VO-TC-13746