K150141
✗ 2.3i, 2.5TDi, 2.8i
K150082
✓ 2.3i, 2.5TDi, 2.8i

AU-TC-0674	AU-TC-0678
⇧	⇧

VO-TC-4000	VO-TC-4001
⇧	⇧

VO-SB-1362

VO-DS-8226

VO-SB-1362

VO-SB-1365
☞ VO-TC-8228

VO-AX-8291	VO-ES-8227

VO-SB-1364

VO-TC-8229	VO-TC-8230
⇩	⇩

VO-SB-6748
Ø25mm
VO-SB-6749
Ø27mm

VO-SB-1366
☞ VO-TC-8228

VO-SB-10149
☞ VO-LS-0356/0357

VO-LS-0157	
→Ch. 3B-XP-213726	
VO-LS-0357	**VO-LS-0356**
Ch. 3B-XP-213727→	Ch. 3B-XP-213727→

VO-TC-8228
⇩ Ø 20mm

VO-RK-5000
❶+❷+❸+❹+❺ (→ Ø 20mm)
VO-RK-5001
❶+❷+❸+❹+❺+❻ (→ Ø 20mm)

✗ 4 MOTION

VO-SB-10977

✓ 4 MOTION

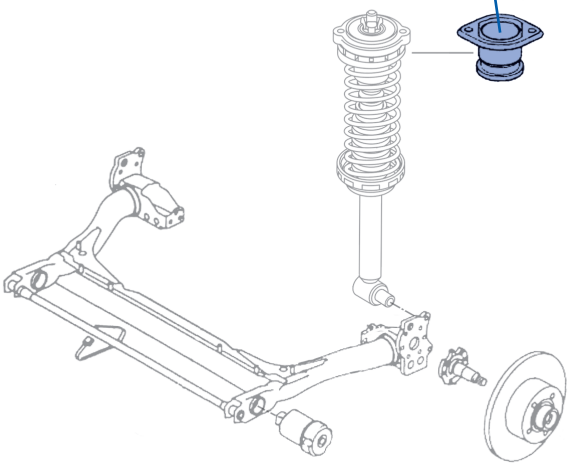

VO-SB-8445	VO-SB-8446