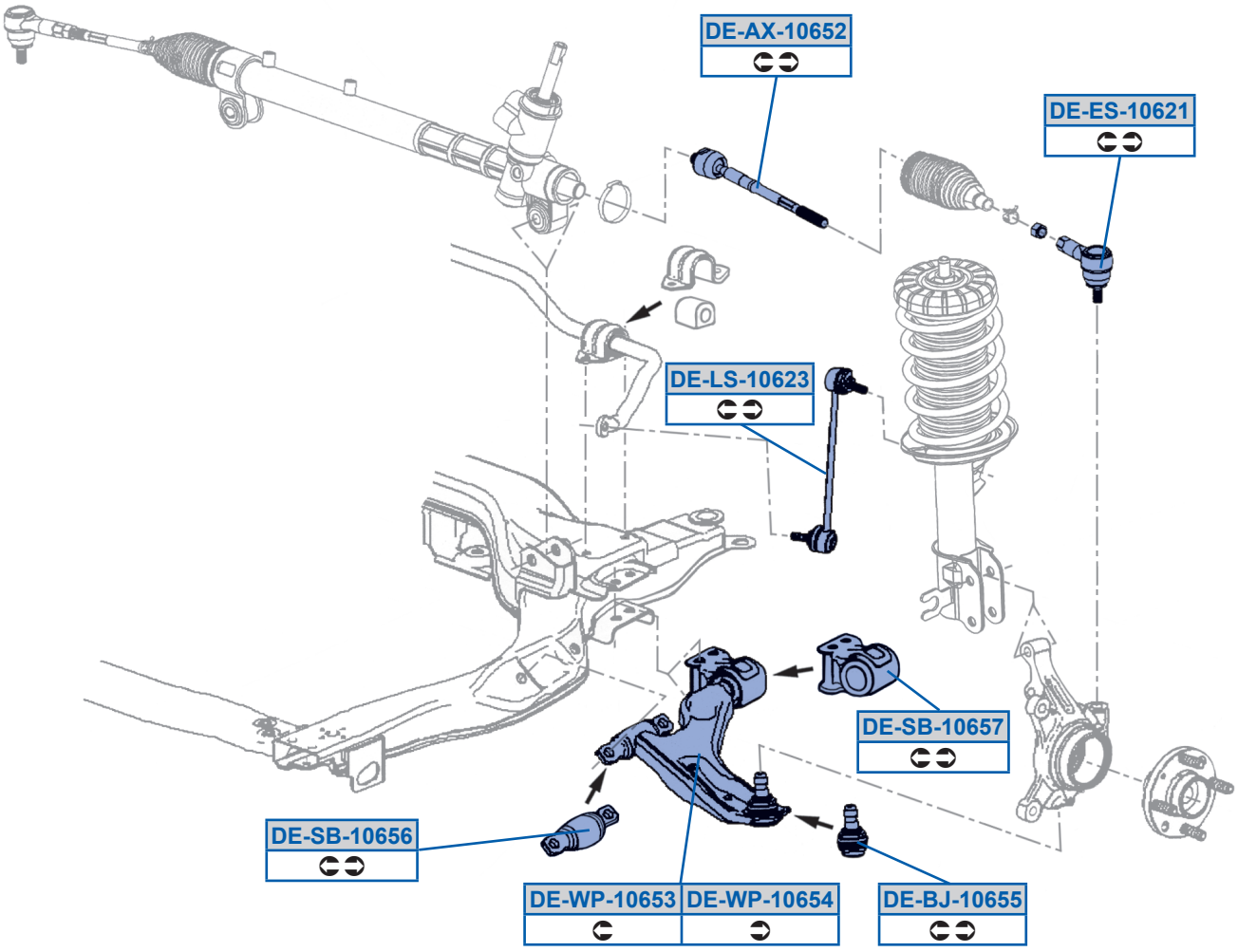
DE-AX-10652
DE-ES-10621
DE-LS-10623
DE-SB-10657
DE-SB-10656
DE-WP-10653
DE-WP-10654
DE-BJ-10655

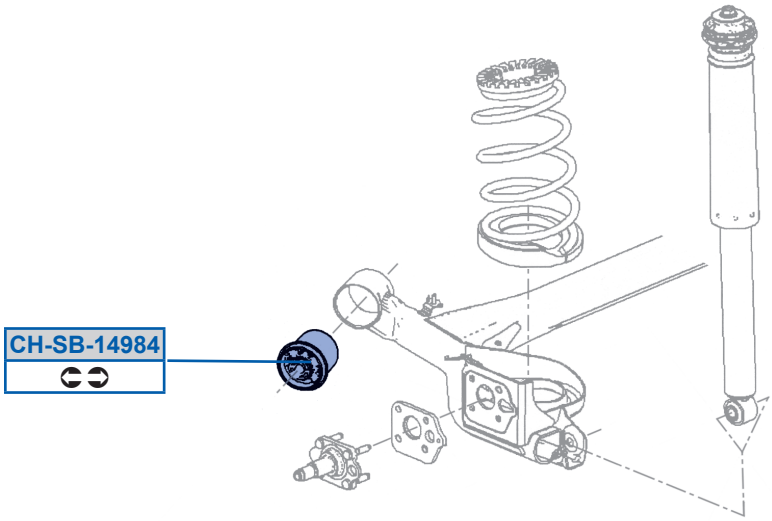
CH-SB-14984