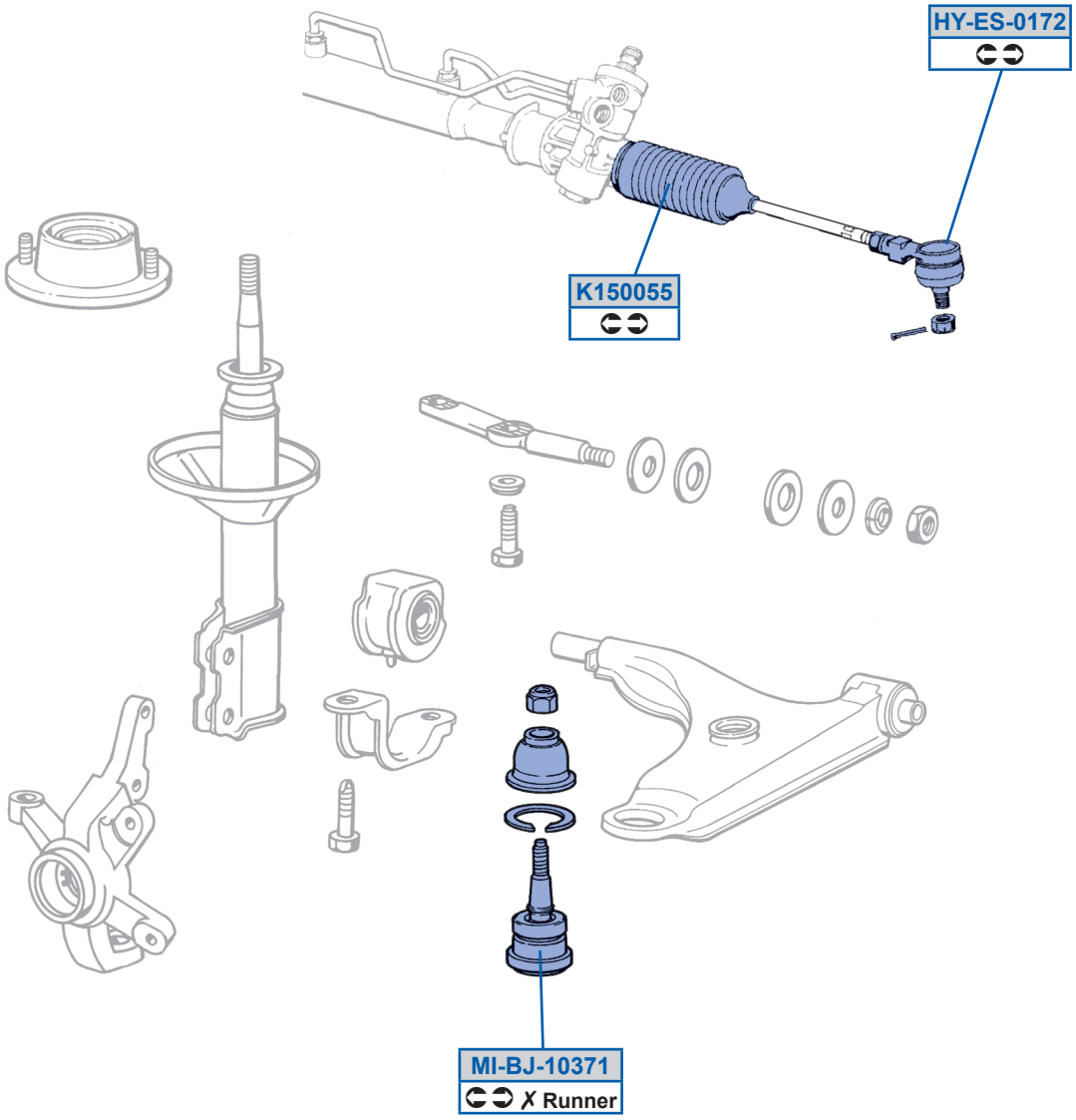
HY-ES-0172
K150055
MI-BJ-10371
✗ Runner