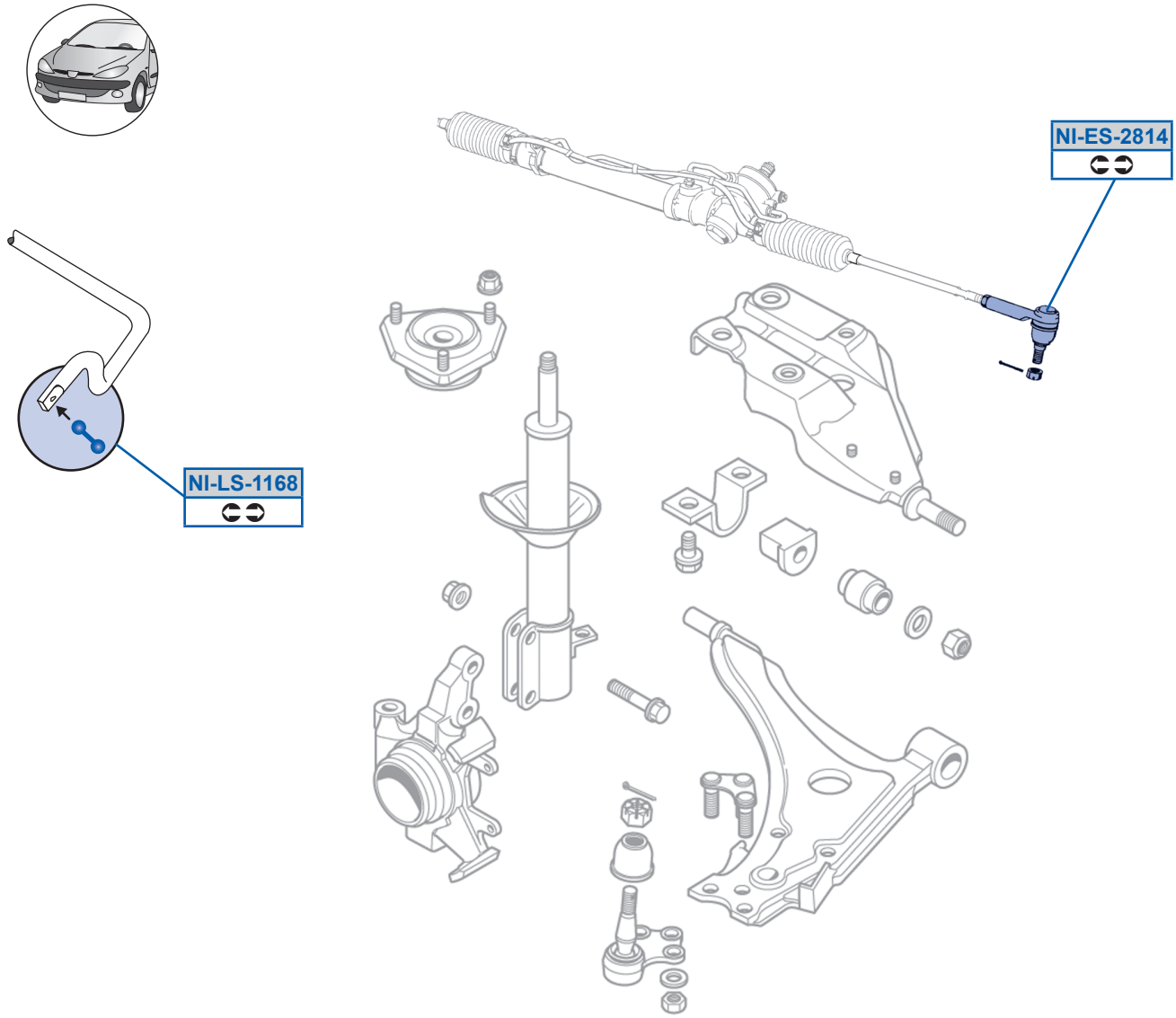
NI-ES-2814
NI-LS-1168