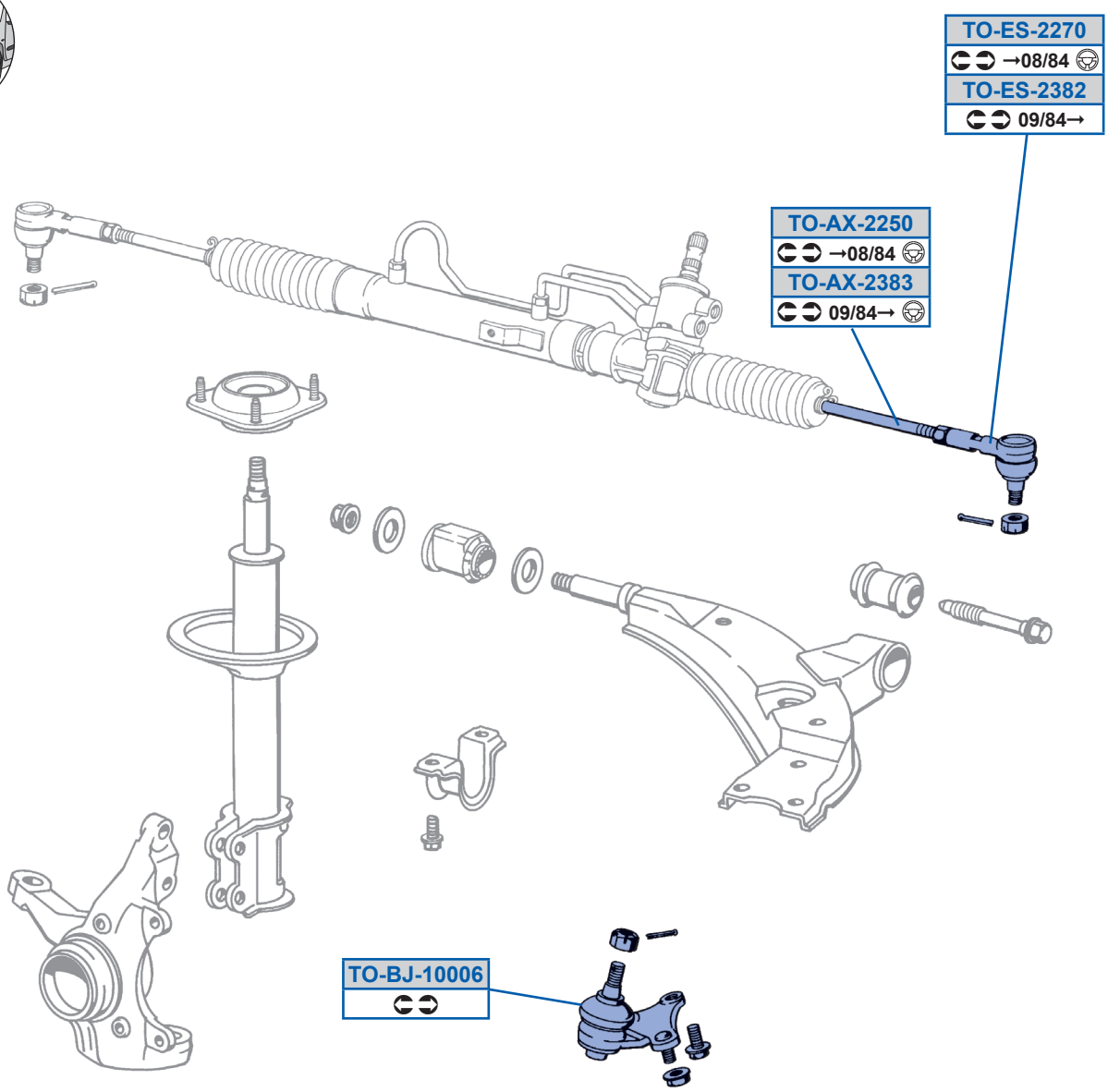
TO-ES-2270
→08/84
TO-ES-2382
09/84→
TO-AX-2250
→08/84
TO-AX-2383
09/84→
TO-BJ-10006