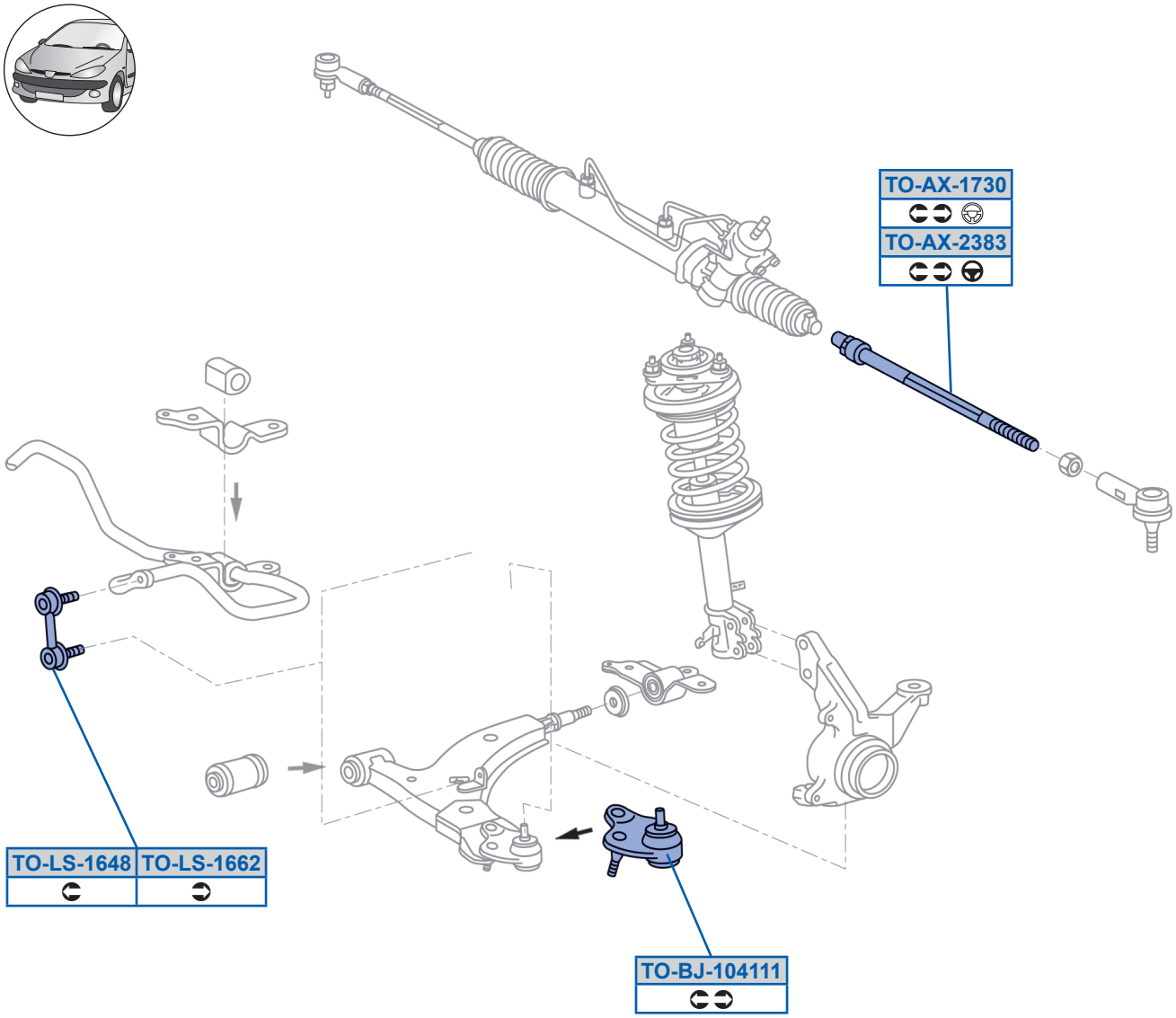
TO-AX-1730
TO-AX-2383
TO-LS-1648
TO-LS-1662
TO-BJ-104111

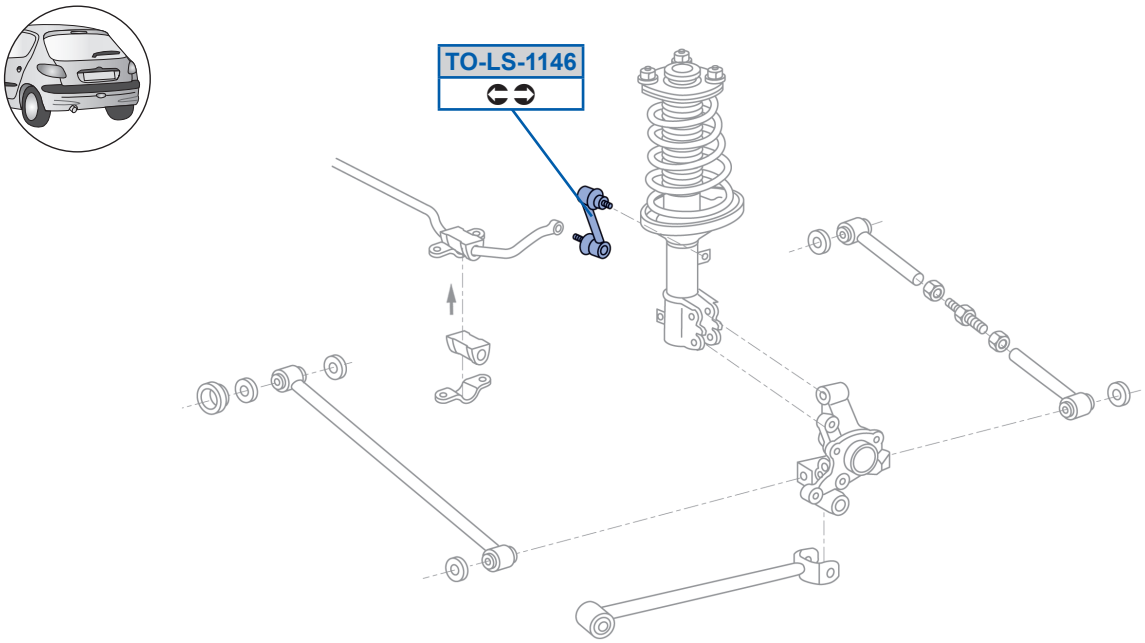
TO-LS-1146