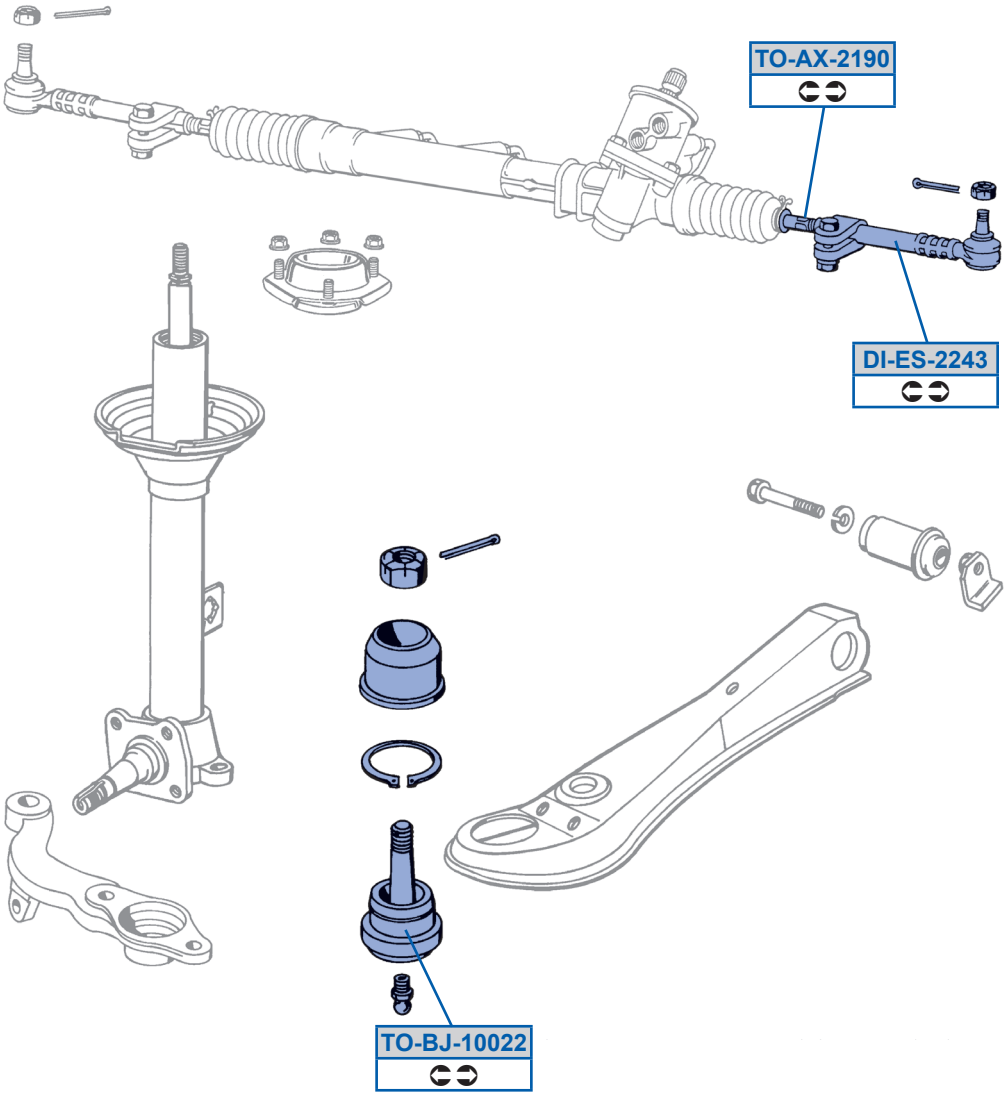
TO-AX-2190
DI-ES-2243
TO-BJ-10022