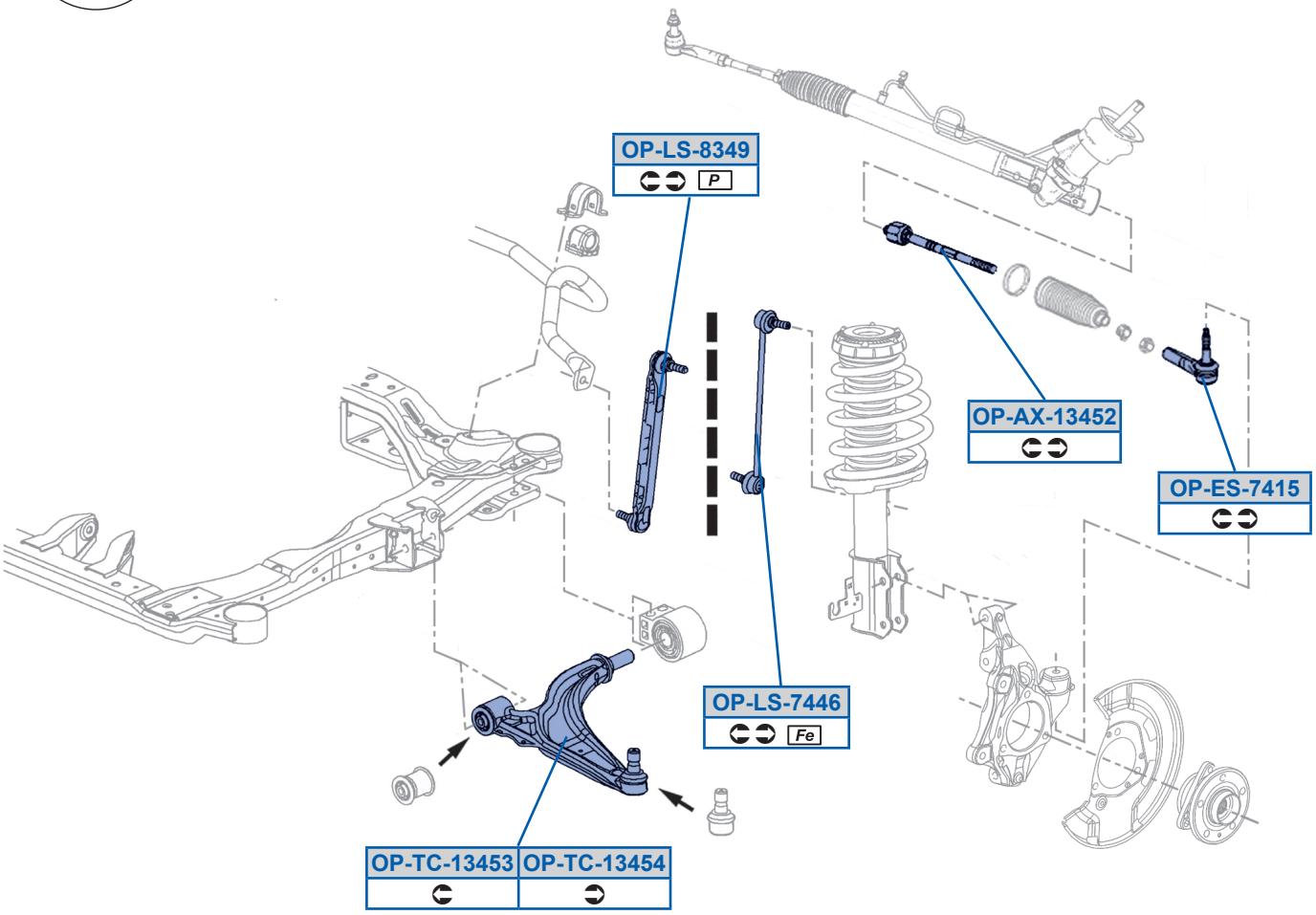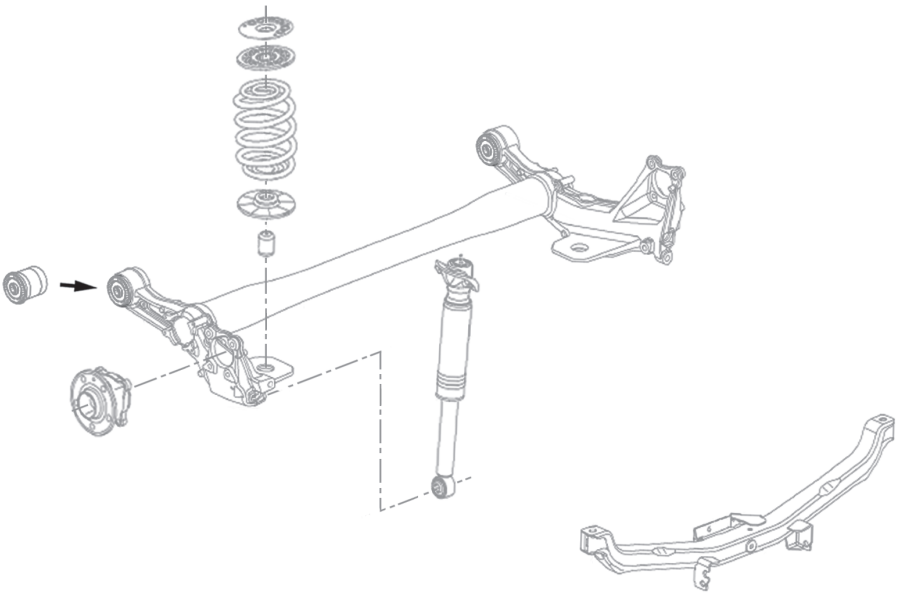
OP-LS-8349
P
OP-AX-13452
OP-ES-7415
OP-LS-7446
Fe
OP-TC-13453
OP-TC-13454