NAME	AB-JP172 Electrical Specifications	NO	AB-1-4-1043

Picture

Plug

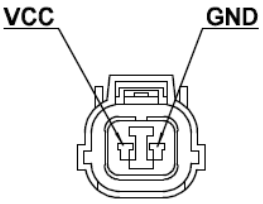

Waveform

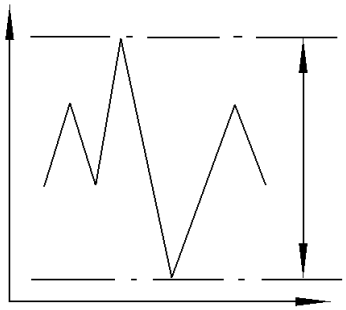

Drawing and Dimension

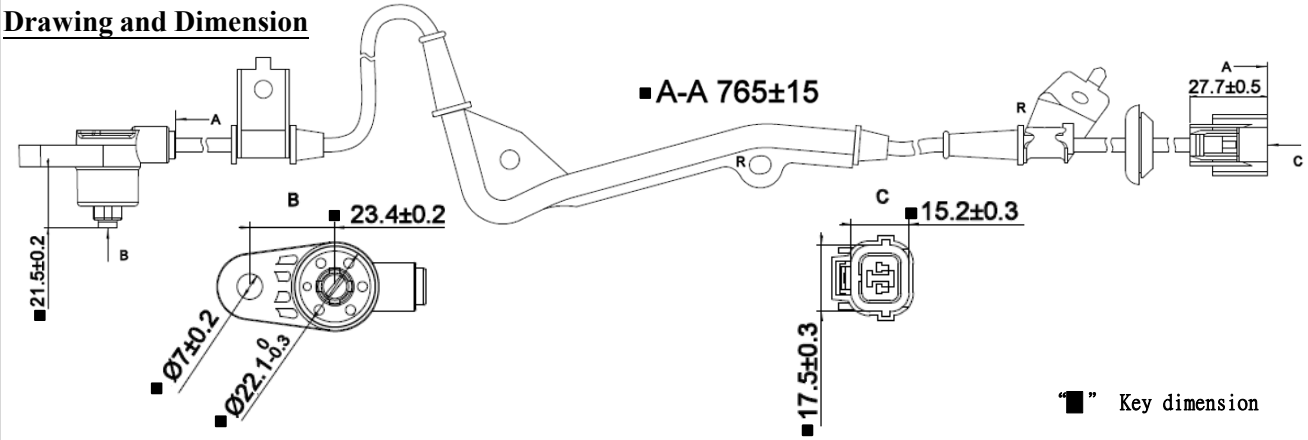

TYPE：□Hall ■ Magnetic

Parameter	SYMBOLS	MIN.	TYP.	MAX.	UNITS
Resistance（25℃）	R	1160	1450	1740	ohm
Inductance@1KHz	L	1240	1550	1860	mH
Working Voltage	V	N/A	N/A	N/A	V
Detecting range	Air Gap	N/A	1	N/A	mm
Magnetic field direction SFS=South facing sensor NFS=North facing sensor		SFS	SFS	SFS	
Duty ratio(t1/T)	Duty	N/A	N/A	N/A	%
Temperature	To	-40	25	125	℃
Reference Teeth		N/A	48	N/A	
Output Voltage (600RPM,1mm)	Vp-p	2.8	3.5	4.2	V

2021.08.16		1	汪芳波	王亮	黄鹏	MOBILETRON
Date of first edition	Date of revised edition	edition	Manuscript	Review	Approval	Aug.19.2021 Release