NAME	MS-E028 Electrical Specifications	NO	MS-1-4-038

Picture

Plug

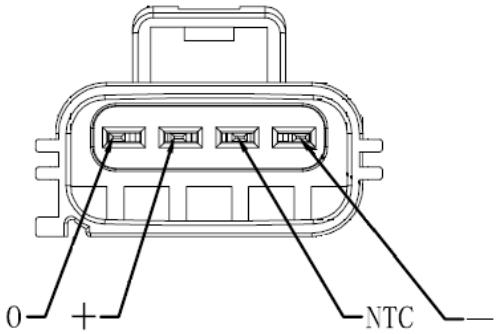

Drawing and Dimension

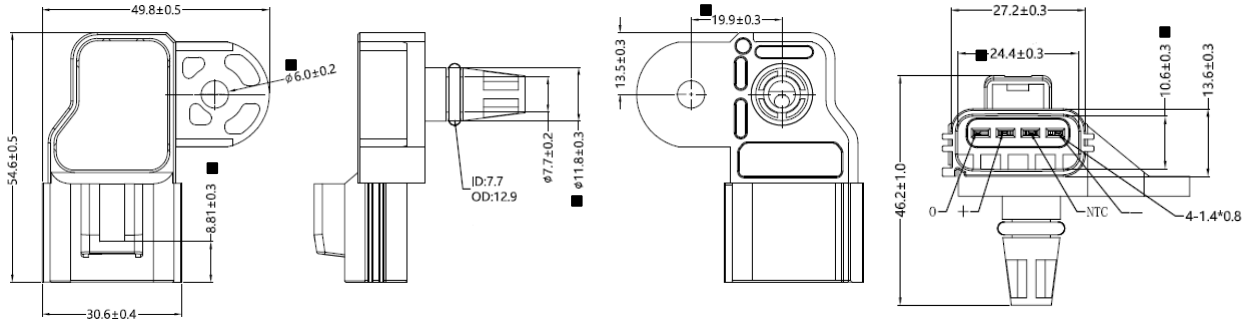

■: Key dimension

PARAMETERS AND CONDITIONS	SYMBOLS	MIN.	TYP.	MAX.	UNITS
Storage Temperature Range	T_{ST}	-40		150	℃
Operating Temperature Range	T_{OP}	-40		125	℃
Pressure Range	Pr	10		320	KPa
Supply Voltage	V_{Sv}	4.8	5.0	5.2	V
Supply Current	Isc		10		mA
Accuracy @ 25℃	%FS	-3		+3	%FS
The MAP voltage output at 25℃ (@ Supply Voltage (Vs) =5.0Vdc, rated pressure = 101.3KPa)	V	1.33	1.63	1.93	V

2020.10.22		1	王亮	呂漢榮	黃鵬	MOBILETRON
Date of first edition	Date of revised edition	edition	Manuscript	Review	Approval	Oct.27.2020
						Release