NAME	MS-E054 Electrical Specifications	NO	MS-1-4-068

Picture

Plug

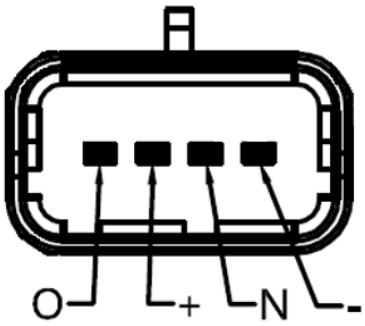

Drawing and Dimension

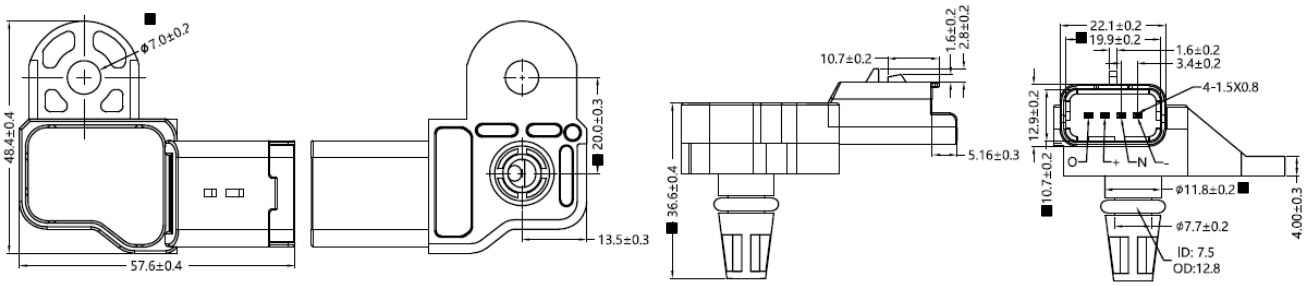

■ Key dimension

PARAMETERS AND CONDITIONS	SYMBOLS	MIN.	TYP.	MAX.	UNITS
Storage Temperature Range	T_{ST}	-40		150	℃
Operating Temperature Range	T_{OP}	-40		125	℃
Pressure Range	Pr	14		111	KPa
Supply Voltage	V_{Sv}	4.8	5	5.2	V
Supply Current	Isc	-	10	-	mA
Accuracy @ 25℃	%FS	-3	-	+3	%FS
The MAP voltage output at 25℃ (@ Supply Voltage (Vs) =5.0Vdc, rated pressure = 101.3KPa)	V	0.43	0.73	1.03	V

2021.03.03		1	呂漢榮	王亮	黃鵬	MOBILETRON
Date of first edition	Date of revised edition	edition	Manuscript	Review	Approval	Mar.08.2021 Release