NAME	MS-E078 Electrical Specifications	NO	MS-1-4-102

Picture

Plug

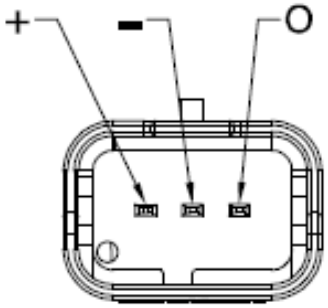

Drawing and Dimension

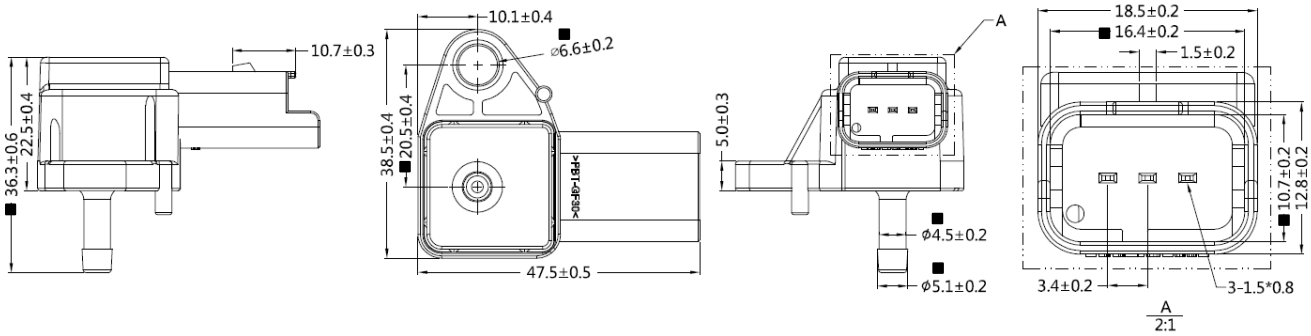

■ Key dimension

PARAMETERS AND CONDITIONS	SYMBOLS	MIN.	TYP.	MAX.	UNITS
Storage Temperature Range	T_{ST}	-40		-150	℃
Operating Temperature Range	T_{OP}	-40		125	℃
Pressure Range	Pr	0		260	KPa
Supply Voltage	V_{Sv}	4.8		5.2	V
Supply Current	Isc		10		mA
Accuracy @ 25℃	%FS	-3		+3	%FS
The MAP voltage output at 25℃ (@ Supply Voltage (Vs) =5.0Vdc, rated pressure = 101.3KPa)	V	2.09	2.39	2.69	V

2021.05.27		1	王亮	呂漢榮	黃鵬	MOBILETRON
Date of first edition	Date of revised edition	edition	Manuscript	Review	Approval	Jun.01.2021 Release