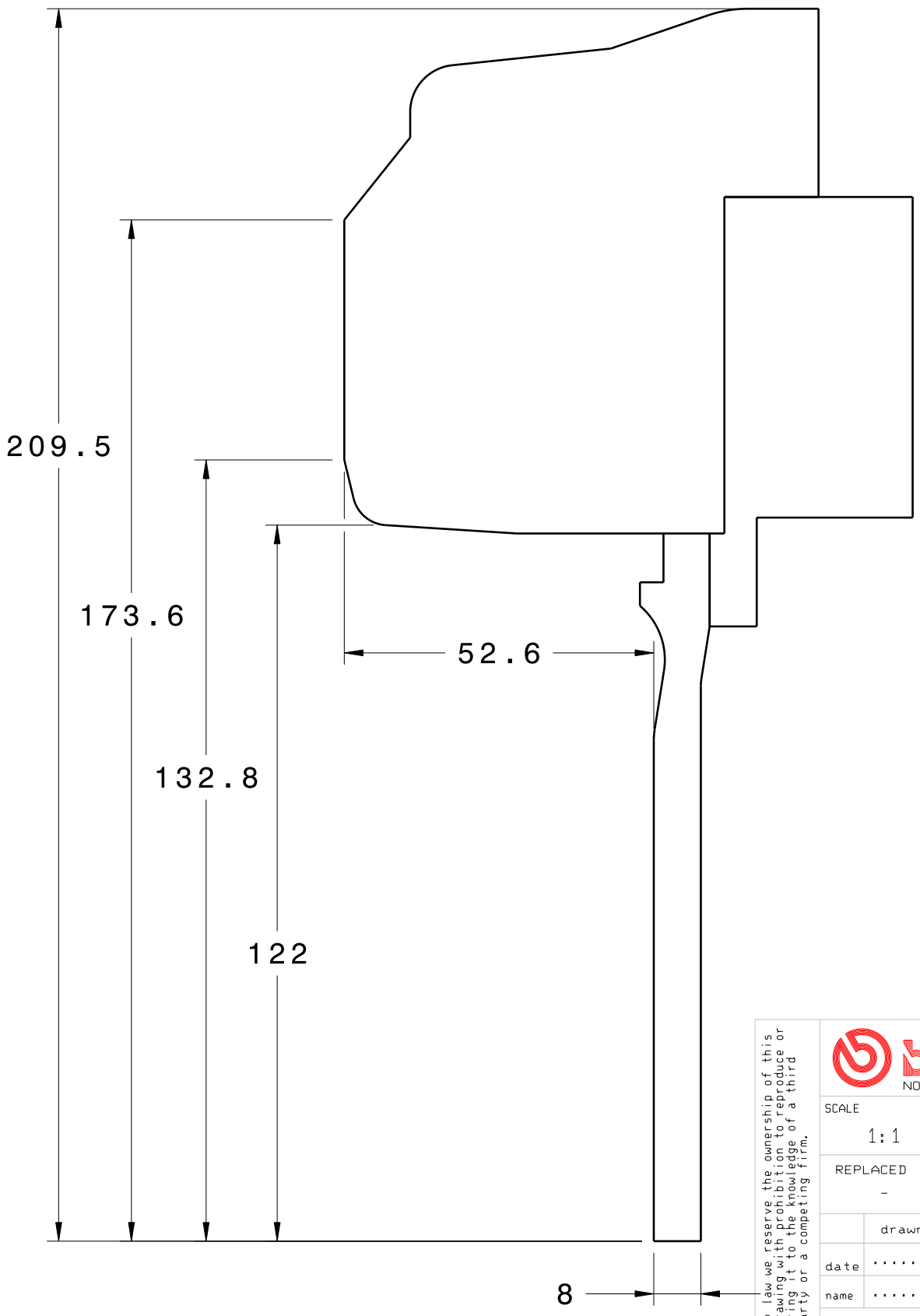


By law we reserve the ownership of this drawing with prohibition to reproduce or bring it to the knowledge of a third party or a competing firm.

brembo NORTH AMERICA

| SCALE | MASS |
|---|---|
| 1:1 | - Kg |
| REPLACED | REPLACED BY |
| - | - |

| | drawn | checked | approved |
|---|---|---|---|
| date | ..... | ..... | ..... |
| name | ..... | | ..... |

A

PRODUCT SPEC. -

Dimension in MILLIMETERS

Roughness in Ra (µm)

PART NAME: BRAKE SYSTEM CROSSECTION, 90-05 ACURA NSX, FRONT

SHEET 1/1 — DRAWING NO. 1M1.8056A — REV —

DRAWING MADE BY CAD - NO MODIFICATION BY HAND

0 10 20 30 40 50 60 70 80 90 100

A B C E F G H J K L P Q S T U V W X Y Z a b d e f h m n q r t