Hengst FILTER
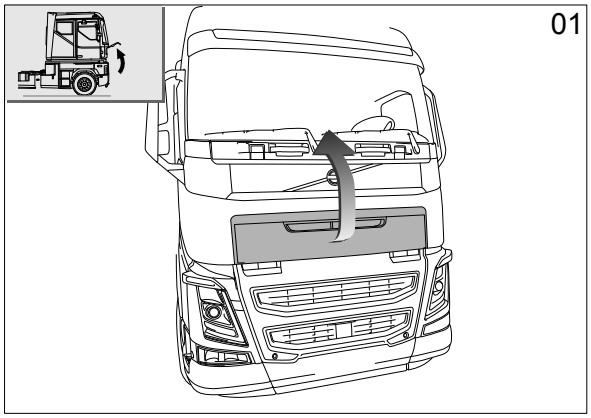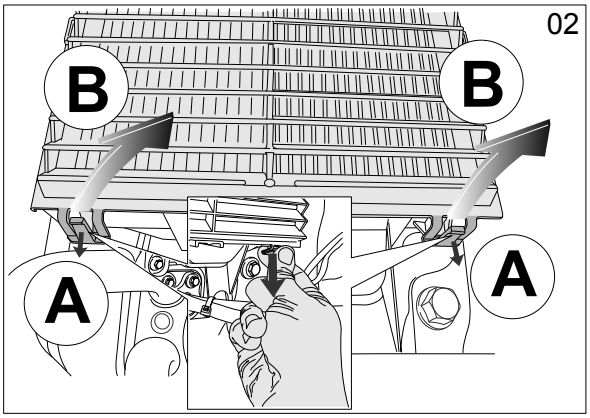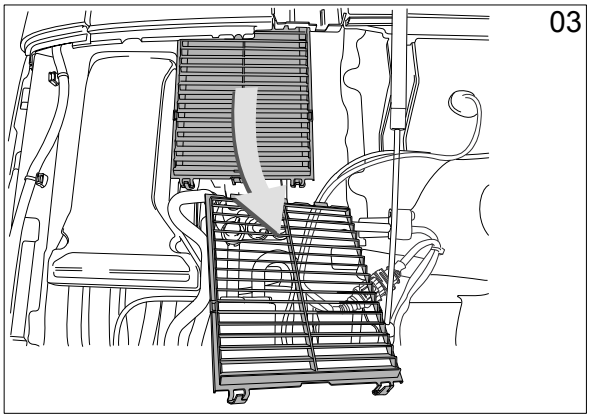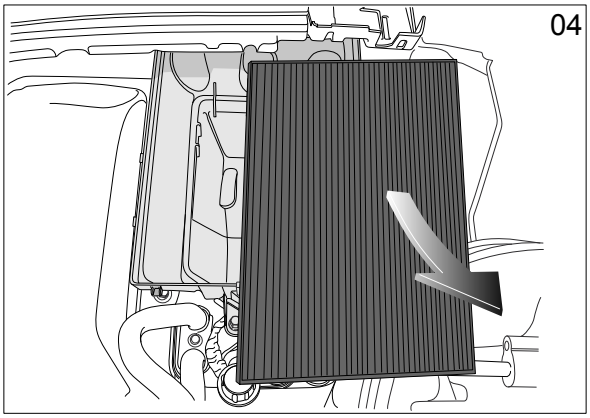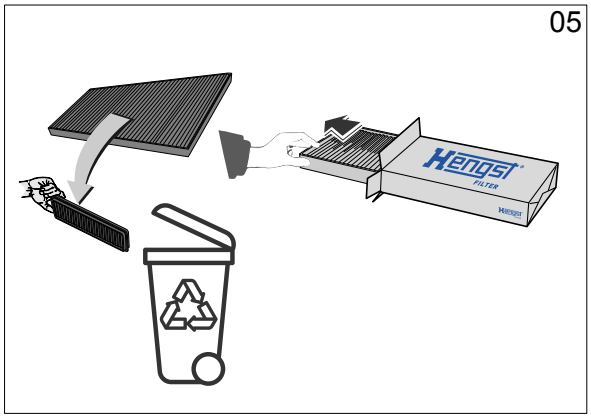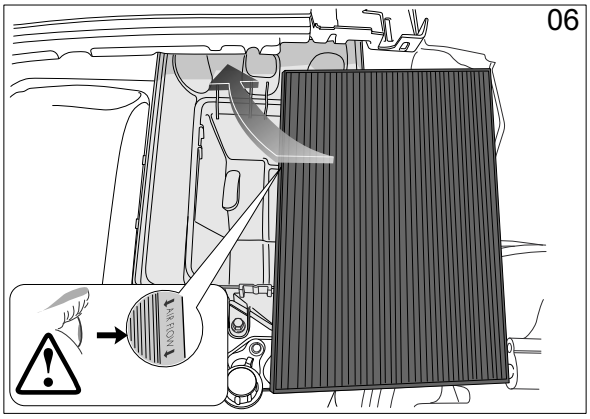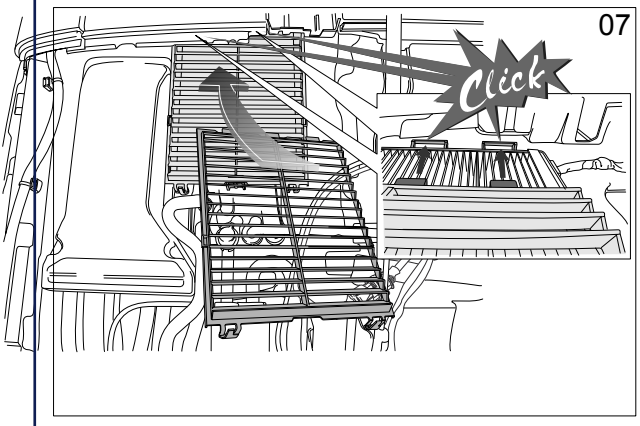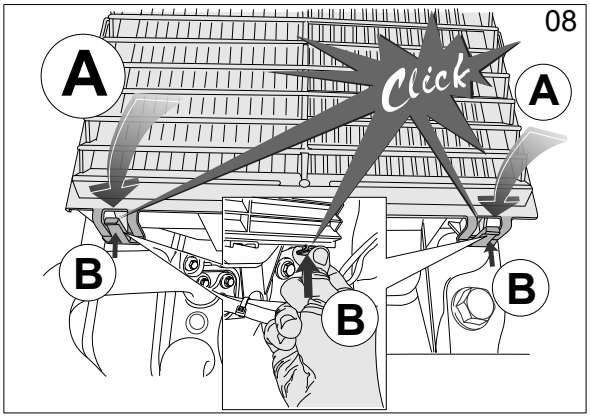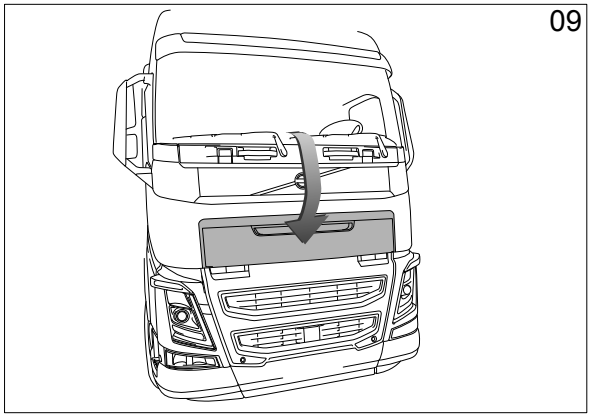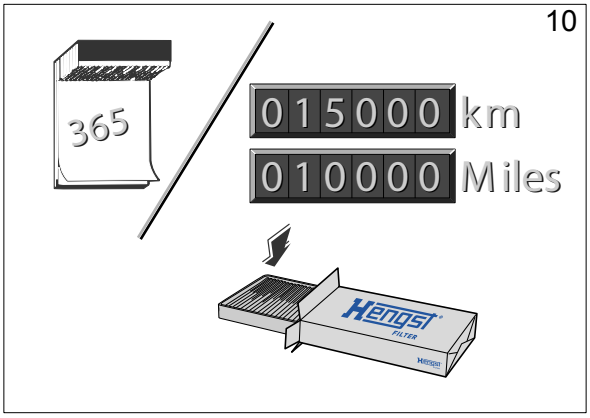
E6952LI